ECE:3350 Spring 2026 - Computer Architecture and Organization

Simple Instruction Set Computer (SISC) Project

Part 1: Due Monday, March 3, at 8:30 am

In this first part of the project, you will implement the modules and Datapath depicted below:

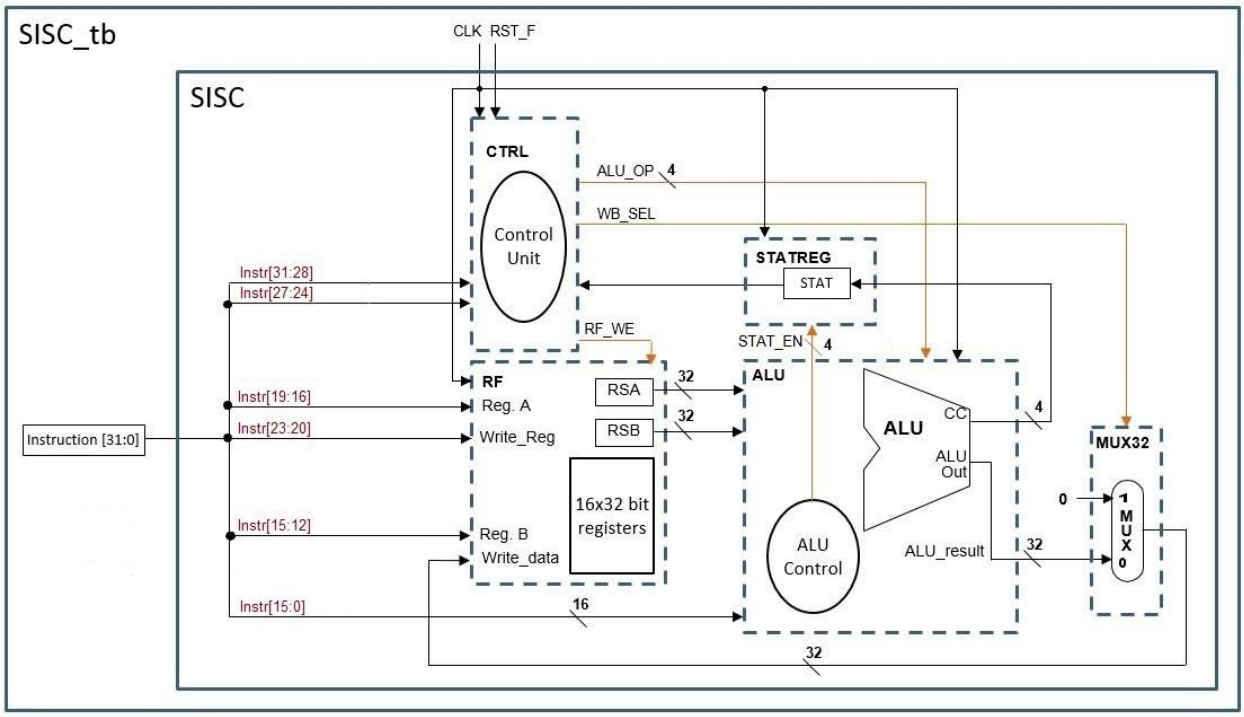

You are given:

- All of alu.v, rf.v, statreg.v, and mux32.v, which you may not modify.
- Detailed descriptions of each module's function and control lines, in block comment form, at the top of every Verilog file provided to you.
- A mostly empty ctrl.v, which contains descriptions for the inputs and outputs, as well as some parameters, reset processes, and other miscellaneous data.
- A mostly empty 'sisc.v' which contains a module 'sisc' and descriptions for the inputs and outputs, as well as other miscellaneous data.
- The file sisc_tb_p1.v, which is the testbench file for the first part of the project.

You are required to:

- Finish the implementation of ctrl.v as a finite state machine, so that the control lines alu_op, rf_we, and wb_sel shown above in orange operate correctly as described by the given files.

- Complete the Verilog file named 'sisc.v' which contains a module 'sisc' that instantiates each of the five modules shown above, connects their control and data signals, and monitors the signals specified below.
- You are given a Verilog file named 'sisc_tb_p1.v' which contains a module 'sisc_tb' that instantiates the sisc module, drives the CLK and RST_F signals as described below, and generates instructions that test each of the supported instructions for Part 1.

Part 1 Notes:

- Read the documentation included with each file carefully before beginning to connect them.
- In the RF module, the outputs of the register file R[A] and R[B] are latched in the RSA and RSB registers on the positive edge of the clock.
- In the ALU module, the output of the ALU is latched in the ALUOut register on the positive edge of the clock.
- The sisc module should take in three inputs (IR, CLK, and RST_F) and have no outputs.
- The sisc_tb module should have no inputs or outputs.
- In the testbench file, make sure the clock process runs at the correct rate. The RST_F line is held at 0 for two cycles before beginning to assign instructions to IR. The first instruction is delayed (25 ns) so that it appears at IR on the first cycle after the reset line has been pulled back to 1, All further instructions are delayed by 50 ns to allow for all five cycles to execute in the control unit. At the time the instruction changes, the cntrl.v module should enter the FETCH state.
- The instructions your design should support by the end of Part 1 are NOP, ADD, ADI, SUB, NOT, OR, AND, XOR, ROR, ROL, SHR, SHL, and HLT. Always include a HLT command at the end of your instructions to end execution.
- You must use a $monitor(…) statement to test your design. In the sisc.v file that you submit, monitor the following signals: IR, R1, R2, R3, R4, R5, ALU_OP, WB_SEL, RF_WE, and the 32-bit line connected to the write_data input of the rf module.
    - To monitor a signal within an instantiated module, such as R1 and R2, use the dot operator. If you have instantiated module rf with the name my_rf, you can access R1 with the following syntax: `$monitor("R1=%h", my_rf.ram_array[1]);`.

Submission Overview:

- Compress your project directory, including the 'work' directory and the state diagram, into a .zip file named 'groupname_p1.zip' (where groupname is your desired group name) and submit it to your "Verilog Project – Part 1" dropbox on ICON.

- Your .zip file should contain:
    - Alu.v, mux32.v, rf.v, and statreg.v, exactly as they were provided.
    - Ctrl.v, sisc.v, and sisc_tb.v, completed by your group.
        - Note that sisc.v must contain the $monitor statement described above!

- The ‘work’ directory.
- Your simulation transcript.

Part 1 Grading Rubric:

Ctrl.v Implementation	27 pts
SISC.v Implementation	27 pts
Correct Execution of All Instructions	46 pts
Total	**100 pts**